FLAT SERIES
SIDE MOUNT - RADIUS
(Round Structures)

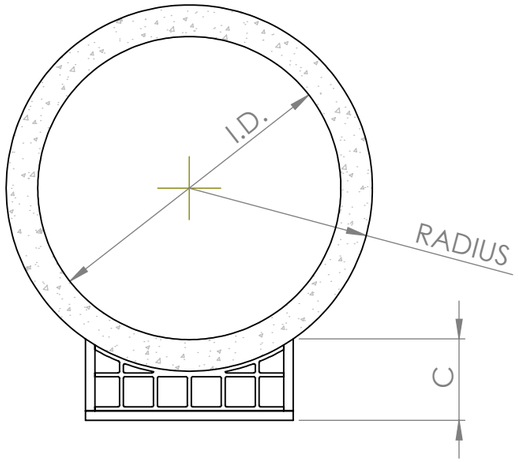

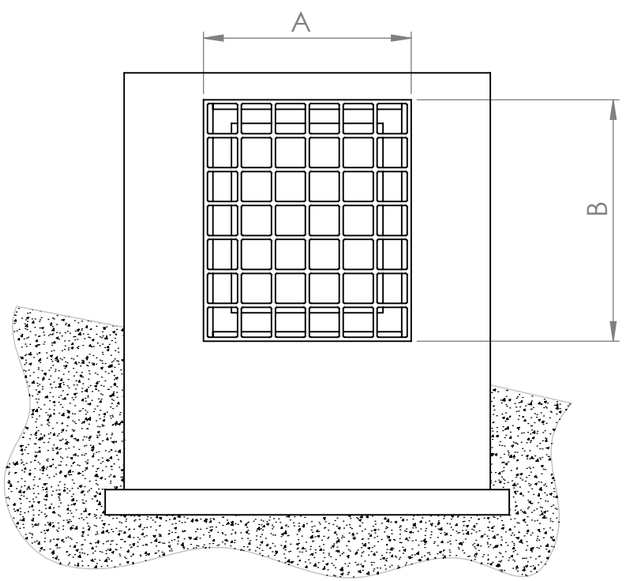

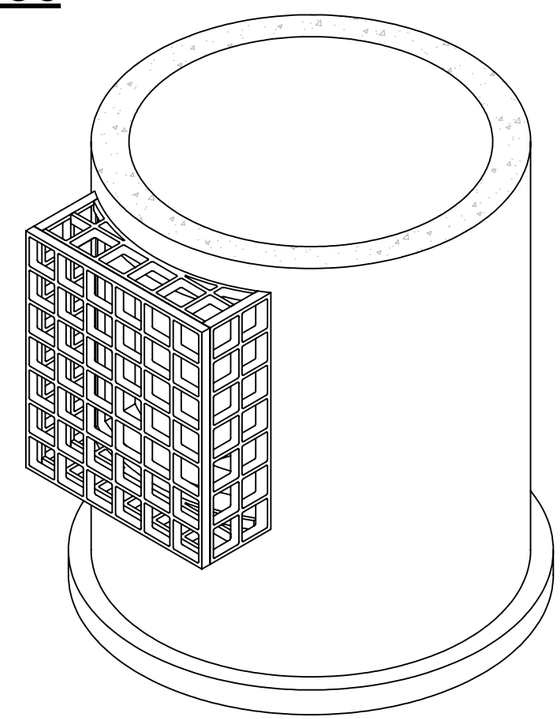

SIZE TABLE											
WIDTH 'A'	11-3/8"	16-3/4"	22-1/8"	27-1/2"	32-7/8"	38-1/4"	43-5/8"	49"	54-3/8"	59-3/4"	65-1/8"
LENGTH 'B'	11-3/8"	16-3/4"	22-1/8"	27-1/2"	32-7/8"	38-1/4"	43-5/8"	49"	54-3/8"	59-3/4"	65-1/8"
HEIGHT 'C'	12-7/8"	HEIGHT 'C' BASED ON RADIUS AND WIDTH									
	TWO GRIDS HIGH										

CONCRETE STRUCTURE DIMS (IN.)			STORMRAX FLAT DIMS (IN.)		
INSIDE DIA:	OUTSIDE DIA:	Wall thickness (Req'd):	Width A:	Length B:	Height C:

Customer:

Date:

Project:

By:

StormRax BY PLASTIC SOLUTIONS

238 McGhee Rd
Winchester, VA 22603
phone: 540-722-3292
www.stormrax.com

PART INFORMATION

NAME:
Flat Series
Side Mount - Radius
(Round Structures)

MATERIAL:
Structural HDPE with fiberglass fill

MOUNTING HARDWARE

ANCHORS:
3/8" X 3" Zinc wedge anchors with nuts and washers

AVAILABLE OPTIONS

Additional sizes available

ADDITIONAL INFORMATION

Made in USA

*Max. opening size:
4-3/4" x 4-3/4"

DATE: 02/01/2024 *REV.* #4

DRAWN BY: MJM

PROPRIETARY AND CONFIDENTIAL

THE INFORMATION CONTAINED IN THIS DRAWING IS THE SOLE PROPERTY OF PLASTIC SOLUTIONS, INC. ANY REPRODUCTION IN PART OR AS A WHOLE WITHOUT WRITTEN PERMISSION BY PLASTIC SOLUTIONS, INC.IS PROHIBITTED.